REVISION				
REV	DESCRIPTION	ECO	DATE	BY/APPD

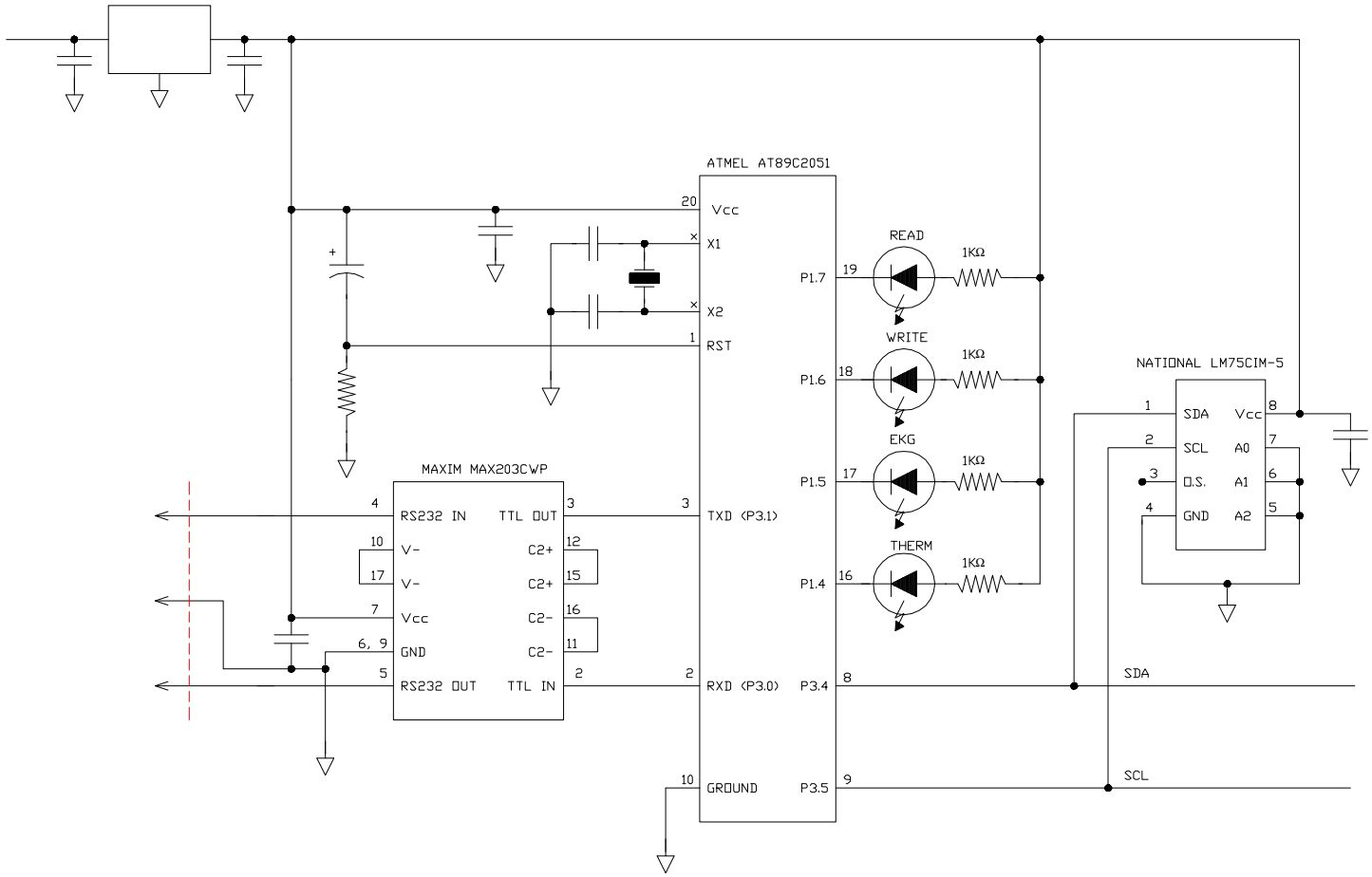

QTY PER DASH NO			ITEM NO	PART OR IDENT NO	REF DESIG	NOMENCLATURE OR DESCRIPTION	CAGE CODE	SPEC/STD
PARTS LIST OR MATERIAL								

TEST ENGINEERING

UNLESS OTHERWISE SPECIFIED DIMENSIONS ARE IN INCHES, TOLERANCES ON
XX DEC ± .02 FINISH 63 RMS
XXX DEC ± .005 ∠ ± 2° 0'
ANGLES ± 30'

MATERIAL:

FINAL PROTECTIVE FINISH:

DR
CHK
ENG
MFG
QA
TF
CONT NO.

WATKINS-JOHNSON COMPANY
PALO ALTO, CALIFORNIA

SIZE C | CAGE CODE 14482 | REV

SCALE | W/O NO. | SHEET OF

CSIZE